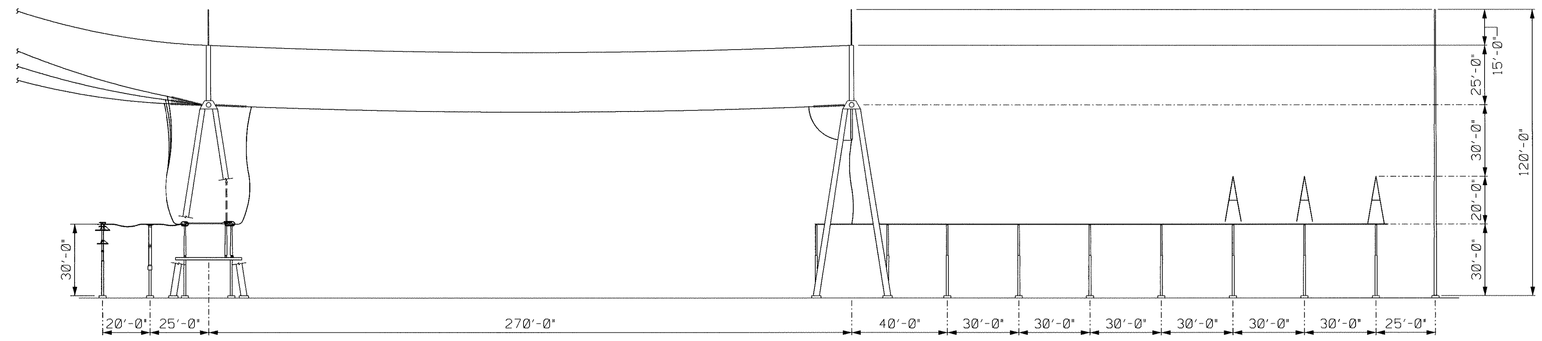

SECTION "A-A"

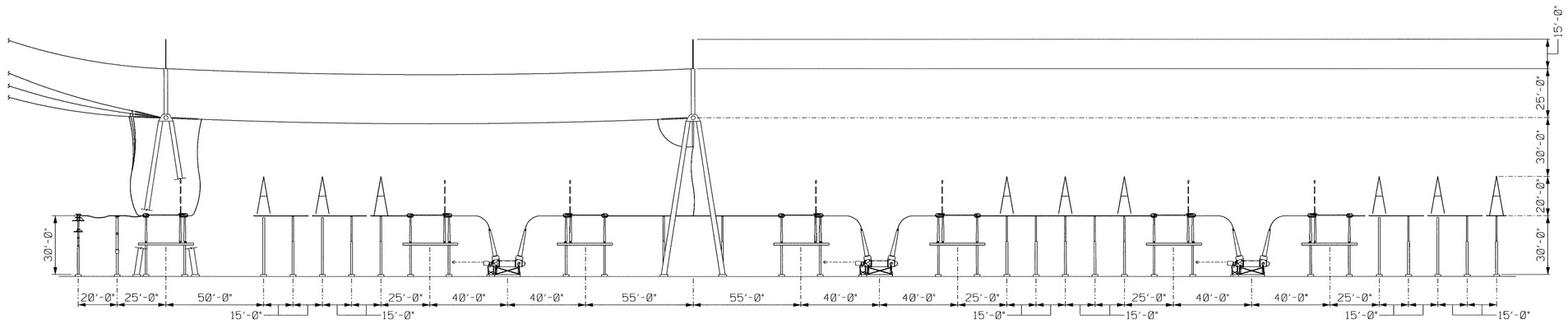

SECTION "B-B"

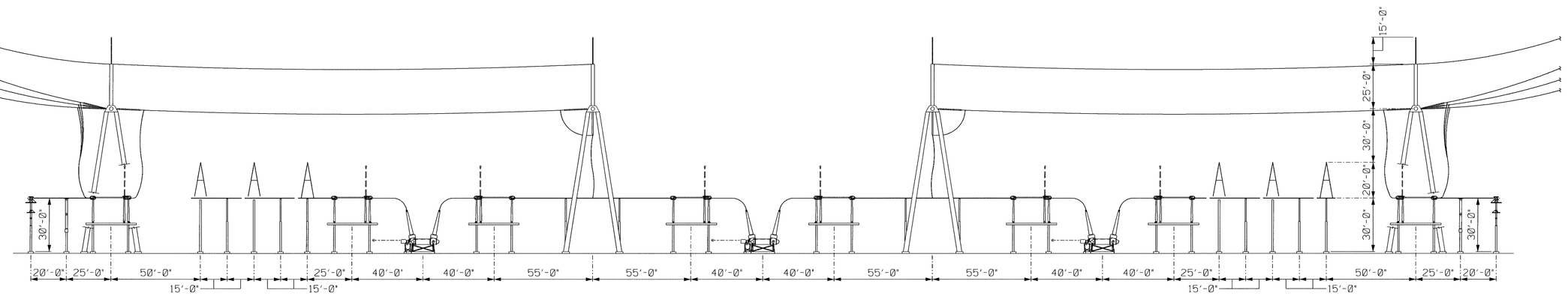

SECTION "C-C"

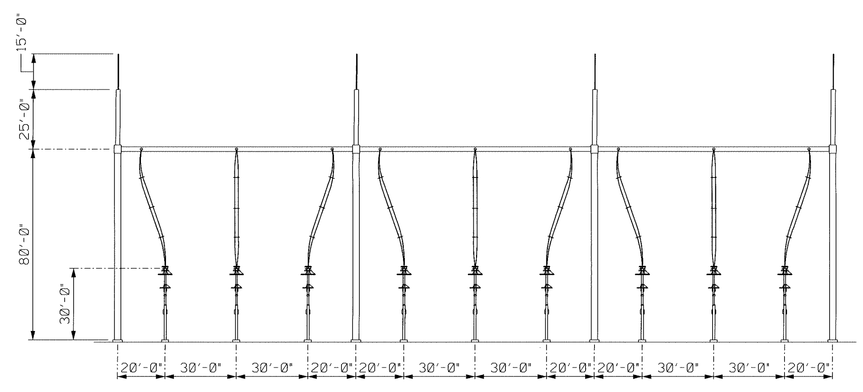

SECTION "D-D"

SYSTEM CODE: Z180
AREA ELEV.: 662Z

GENERAL NOTES
USE PRINTS OF LATEST REVISION ONLY.
DO NOT SCALE - USE DIMENSIONS ONLY.
FOR LIST OF REFERENCE DRAWINGS SEE
DRAWING NO THIS DRAWING
THIS DRAWING SUPERSEDES NONE
THIS DRAWING IS SHEET NO 1 OF 1 SHEETS.

RICHARD I. JACOBER
N.J. PROFESSIONAL ENGINEER NO. 45708

BLACK & VEATCH
11401 LAMAR
OVERLAND PARK, KS 66211

I HEREBY CERTIFY THAT THIS DOCUMENT WAS PREPARED BY ME OR UNDER MY DIRECT SUPERVISION AND THAT I AM A DULY REGISTERED PROFESSIONAL ENGINEER UNDER THE LAWS OF THE STATE OF NEW JERSEY

DATE _____

BLACK & VEATCH

DWN	JMC
DES	ESN
CHK	EGF
APD	RIJ

ISSUED FOR PERMITTING

NO	DATE	DESCRIPTION	DWN	CKD	EXD	APD

REVISION

JEFFERSON SWITCHING STATION
500KV SWITCHYARD
SECTIONS

ARRANGEMENT — ELECTRICAL

PSEG
PUBLIC SERVICE ELECTRIC AND GAS COMPANY
ELECTRIC DELIVERY COMPANY - ASSET RELIABILITY, NEWARK N.J.

DRAWN E.NELSON CHECKED E.FIFE SCALE 1"=30'-0"
DATE 01/07/2009 EXAMINED E.FIFE
WBS/SO _____ APPROVED R.JACOBER
BV

JEF CONCEPT 009

J.RIBARDO

JEF CONCEPT 009